# 22 A/C ... / ...

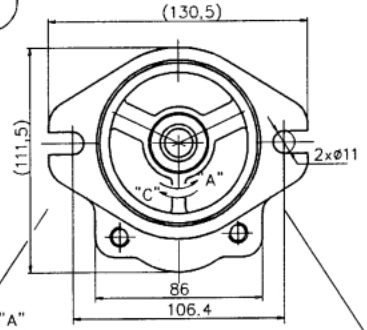


Outlet "A"
Druckseite "A"
Выход "A"

Inlet "A"
Saugseite "A"
Вход "A"

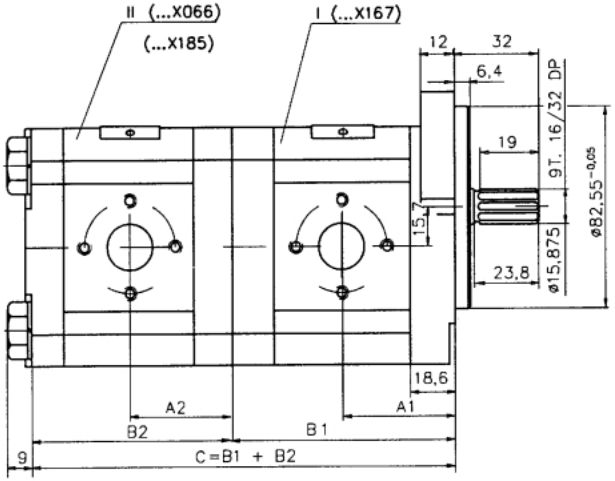


Note: For the supply ports'sizes (input-output) see the schemes of the relevant single pump-type.
For other pumps' combinations contact with the manufacturer.

Bemerkung: Fuer die Abmessungen der Speisebohrungen (Druck-und Saugseite)-sieh Schema des entsprechenden Einzelpumpentypes.
Fuer andere Pumpenkombination-bitte Rucksprache mit dem Hersteller.

Размеры питательных отверстии (вход-выход) выполняются в соответствии с чертежеи одинарных нососов составляющие комбинацию.

| I | | |
|---|---|---|
| Type Typ Тип | A1 | B1 |
| 20A(C)4,5X167 | 42,5 | 87,2 |
| 20A(C)6,3X167 | 42,5 | 87,2 |
| 20A(C)8,2X167 | 42,5 | 87,2 |
| 20A(C)10X167 | 47 | 96,2 |
| 20A(C)11X167 | 48 | 98,3 |
| 20A(C)12X167 | 48,6 | 99,5 |
| 20A(C)14X167 | 50 | 102,7 |
| 20A(C)15X167 | 51 | 104,1 |
| 20A(C)16X167 | 52 | 105,8 |
| 20A(C)19X167 | 54 | 110,7 |
| 20A(C)22X167 | 57 | 115,7 |
| 20A(C)25X167 | 58,8 | 120,6 |

| II | | |
|---|---|---|
| Type Typ Тип | A2 | B2 |
| 20A(C)4.5X066 | 40,5 | 78 |
| 20A(C)6,3X066 | 42 | 81 |
| 20A(C)8,2X066 | 43,5 | 83,9 |
| 20A(C)10X066 | 45 | 87 |
| 20A(C)11X066 | 46 | 89,1 |
| 20A(C)12X066 | 46,6 | 90,3 |
| 20A(C)14X066 | 48 | 93,4 |
| 20A(C)17X066 | 49 | 95 |
| 20A(C)16X066 | 50 | 96,6 |
| 20A(C)19X066 | 52 | 101,5 |
| 20A(C)22X066 | 55 | 106,5 |
| 20A(C)25X066 | 57,2 | 112,1 |

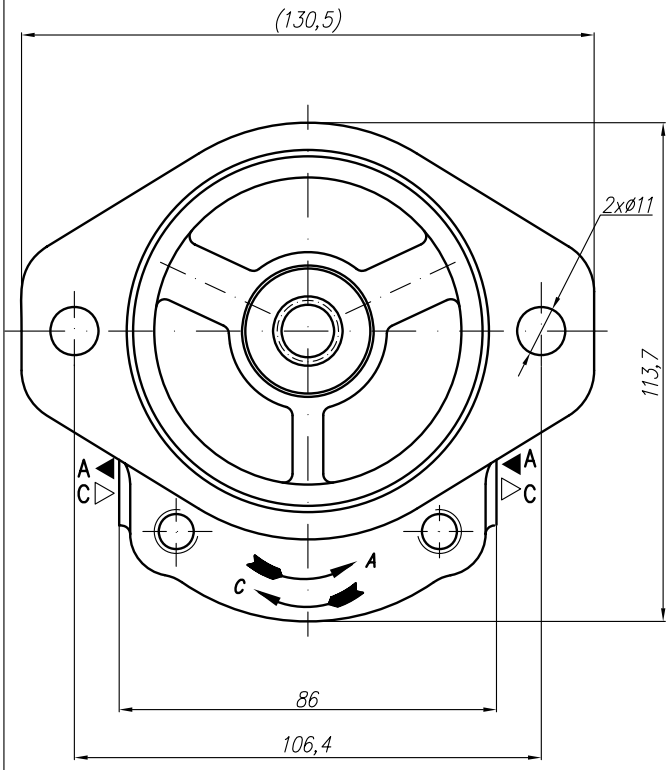


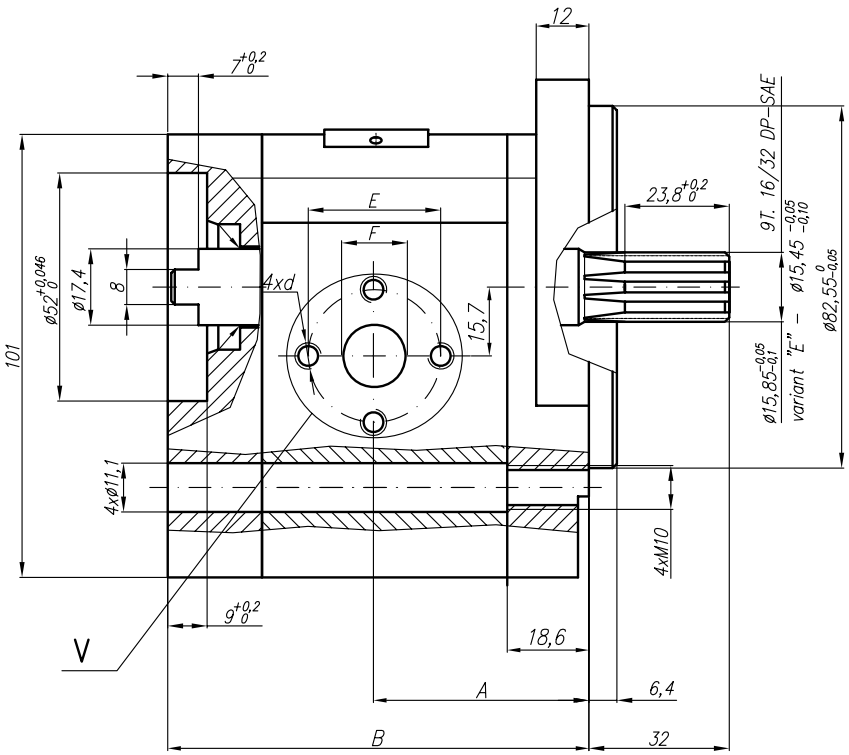


V
Variants for ports – M;G;U

Designations:

...X167 – Normal version (flanges);
...X167M – Metric threads;
...X167G – GAS threads;
...X167U – SAE threads;

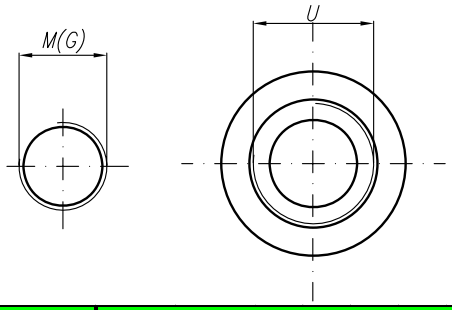


SAE J475 (ISO R725)

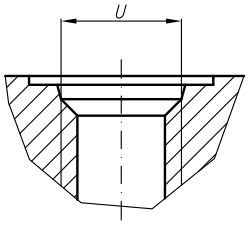


| Type | Displacement | Flow | | Pressure | max Speed | Dimension | | | | | | | | | | | | | | | |
|---|---|---|---|---|---|---|---|---|---|---|---|---|---|---|---|---|---|---|---|---|---|
| | | at 1500 rpm | at max rpm | $P_{nom}$ | n | A | B | Inlet | | | | | | Outlet | | | | | |
| | $cm^3$/rev | l/min | l/min | bar | rpm | mm | mm | E | F | d | M | G | U | E | F | d | M | G | U |
| 20A(C)4,5X167... | 4,5 | 6,14 | 14,33 | 250 | 3500 | 42,1 | 86,8 | 30,2 | 13,1 | M6-6H | M20x1,5 | G1/2 | 1 1/16"-12UNF | 30,2 | 13,1 | M6-6H | M16x1,5 | G1/2 | 7/8"-14UNF |
| 20A(C)6,3X167... | 6,3 | 8,69 | 20,29 | 250 | 3500 | 42,1 | 86,8 | | | | | | | | | | | | |
| 20A(C)8,2X167... | 8,2 | 11,32 | 26,40 | 250 | 3500 | 42,1 | 86,8 | | | | | | | | | | | | |
| 20A(C)10X167... | 10 | 13,95 | 32,55 | 250 | 3500 | 46,6 | 95,8 | 39,7 | 19 | M8-6H | | G3/4 | | | 14,2 | | | | |
| 20A(C)11X167... | 11,3 | 15,76 | 36,78 | 250 | 3500 | 47,6 | 97,9 | | | | | | | | | | | | |
| 20A(C)12X167... | 12 | 16,92 | 39,48 | 250 | 3500 | 48,2 | 99,1 | | | | | | | | | | | | |
| 20A(C)14X167... | 14 | 19,95 | 46,55 | 250 | 3500 | 49,6 | 102,1 | | | | | | | | | | | | |
| 20A(C)15X167... | 15 | 21,60 | 36,00 | 250 | 2500 | 50,6 | 103,7 | | | | | | | | | | | | |
| 20A(C)16X167... | 16 | 23,04 | 38,40 | 250 | 2500 | 51,6 | 105,3 | | | | | | | | | | M20x1,5 | | |
| 20A(C)19X167... | 19 | 27,36 | 45,60 | 200 | 2500 | 53,6 | 110,3 | | | | | | | | | | | | |
| 20A(C)22X167... | 22 | 31,68 | 42,24 | 180 | 2000 | 56,6 | 115,3 | | | | | | | | | | | | |
| 20A(C)25X167... | 25 | 36,00 | 48,00 | 160 | 2000 | 58,8 | 120,2 | | | | | | | 39,7 | 19 | M8 | | | |

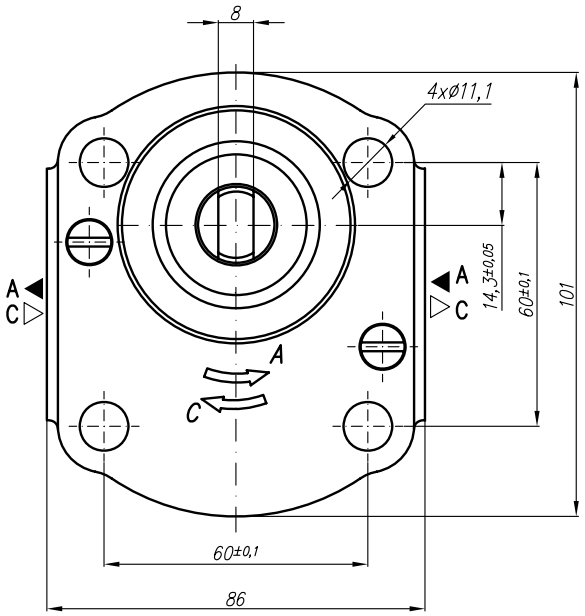


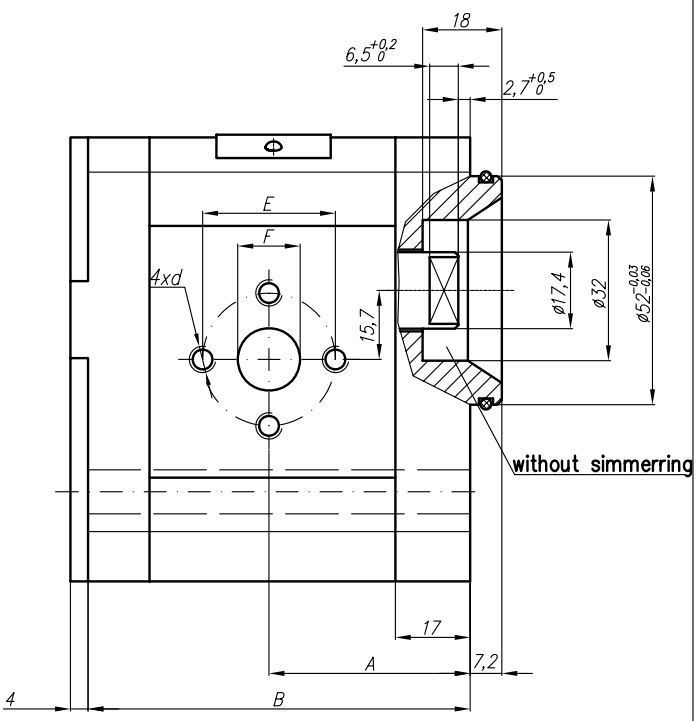


| Type | Displacement | Flow | | Pressure | max Speed | Dimension | | | | | | | |
|---|---|---|---|---|---|---|---|---|---|---|---|---|---|
| | | at 1500 rpm | at max rpm | $P_{nom}$ | n | A | B | Inlet | | | Outlet | | |
| | $cm^3$/rev | l/min | l/min | bar | rpm | mm | mm | E | F | d | E | F | d |
| 20A(C)4,5X066 | 4,5 | 6,14 | 14,33 | 250 | 3500 | 40,5 | 78 | 30,2 | 13,1 | M6-6H | 30,2 | 13,1 | M6-6H |
| 20A(C)6,3X066 | 6,3 | 8,69 | 20,29 | 250 | 3500 | 42 | 81 | | | | | | |
| 20A(C)8,2X066 | 8,2 | 11,32 | 26,40 | 250 | 3500 | 43,5 | 83,9 | | | | | | |
| 20A(C)10X066 | 10 | 13,95 | 32,55 | 250 | 3500 | 45 | 87 | 39,7 | 19 | M8-6H | | 14,2 | |
| 20A(C)11X066 | 11,3 | 15,76 | 36,78 | 250 | 3500 | 46 | 89,1 | | | | | | |
| 20A(C)12X066 | 12 | 16,92 | 39,48 | 250 | 3500 | 46,6 | 90,3 | | | | | | |
| 20A(C)14X066 | 14 | 19,95 | 46,55 | 250 | 3500 | 48 | 93,4 | | | | | | |
| 20A(C)15X066 | 15 | 21,60 | 36,00 | 250 | 2500 | 49 | 95 | | | | | | |
| 20A(C)16X066 | 16 | 23,04 | 38,40 | 250 | 2500 | 50 | 96,6 | | | | | | |
| 20A(C)19X066 | 19 | 27,36 | 45,60 | 200 | 2500 | 52 | 101,5 | | | | | | |
| 20A(C)22X066 | 22 | 31,68 | 42,24 | 180 | 2000 | 55 | 106,5 | | | | | | |
| 20A(C)25X066 | 25 | 36,00 | 48,00 | 160 | 2000 | 57,2 | 111,4 | | | | 39,7 | 19 | M8 |
| | | | | | | | | | | | | | |
| 20A(C)14X066H | 14 | 20,16 | 47,04 | 250 | 3500 | 55,3 | 105,7 | 39,7 | 19 | M8-6H | 30,2 | 14,2 | M6-6H |
| 20A(C)15X066H | 15 | 21,60 | 43,20 | 250 | 3000 | 56 | 107,2 | | | | | | |
| 20A(C)16X066H | 16 | 23,04 | 46,08 | 250 | 3000 | 56,9 | 108,8 | | | | | | |
| 20A(C)17,3X066H | 17,3 | 24,91 | 49,82 | 230 | 3000 | 58 | 110,9 | | | | | | |
| 20A(C)18,2X066H | 18,2 | 26,21 | 52,42 | 210 | 3000 | 58,8 | 112,5 | | | | | | |
| 20A(C)19X066H | 19 | 27,36 | 54,72 | 200 | 3000 | 59,4 | 113,8 | | | | | | |
| 20A(C)22X066H | 22 | 31,68 | 52,80 | 180 | 2500 | 61,9 | 118,8 | | | | | | |
| 20A(C)25X066H | 25 | 36,00 | 60,00 | 160 | 2500 | 64,3 | 123,7 | | | | 39,7 | 19 | M8-6H |
| 20A(C)28X066H | 28 | 40,32 | 67,20 | 130 | 2500 | 66,8 | 128,5 | | | | | | |
| 20A(C)32X066H | 32 | 46,08 | 61,44 | 120 | 2000 | 70 | 134,8 | | | | | | |
| 20A(C)36X066H | 36 | 51,84 | 69,12 | 100 | 2000 | 73,2 | 141,4 | | | | | | |